TP3000

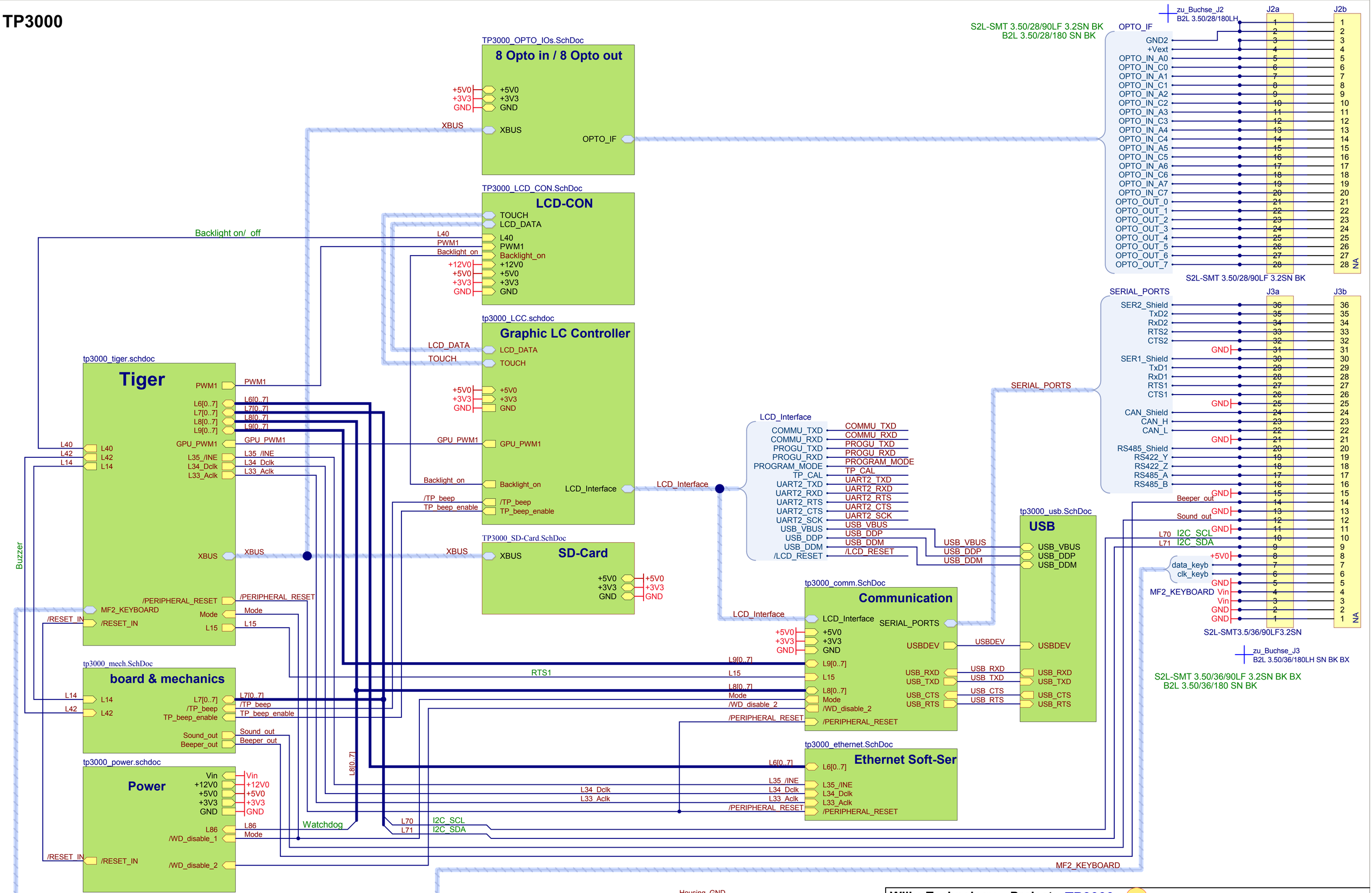

Wilke Technology	Project: TP3000	Ass		
Project No.:	PCB No.: PCB09.0400.V1.2	Assembly1 B1_0		Sheet 1 of 10
File: P:\TP3000\PCB\PCB_Board_1\V1.2\Source\TP3000_main.SchDoc				

Date:	Revision:	Designer:	Release of PCB for Prototype pilot series series	Changes documentated in: 1
16. Jul 2009	V1.0	P.Grusdat		P:\TP3000\PCB\History_TP3000.doc
10. Sep 2009	V1.1	P.Grusdat		P:\TP3000\PCB\History_TP3000.doc
29. Jun 2010	V1.2	P.Grusdat		P:\TP3000\PCB\History_TP3000.doc

TP3000

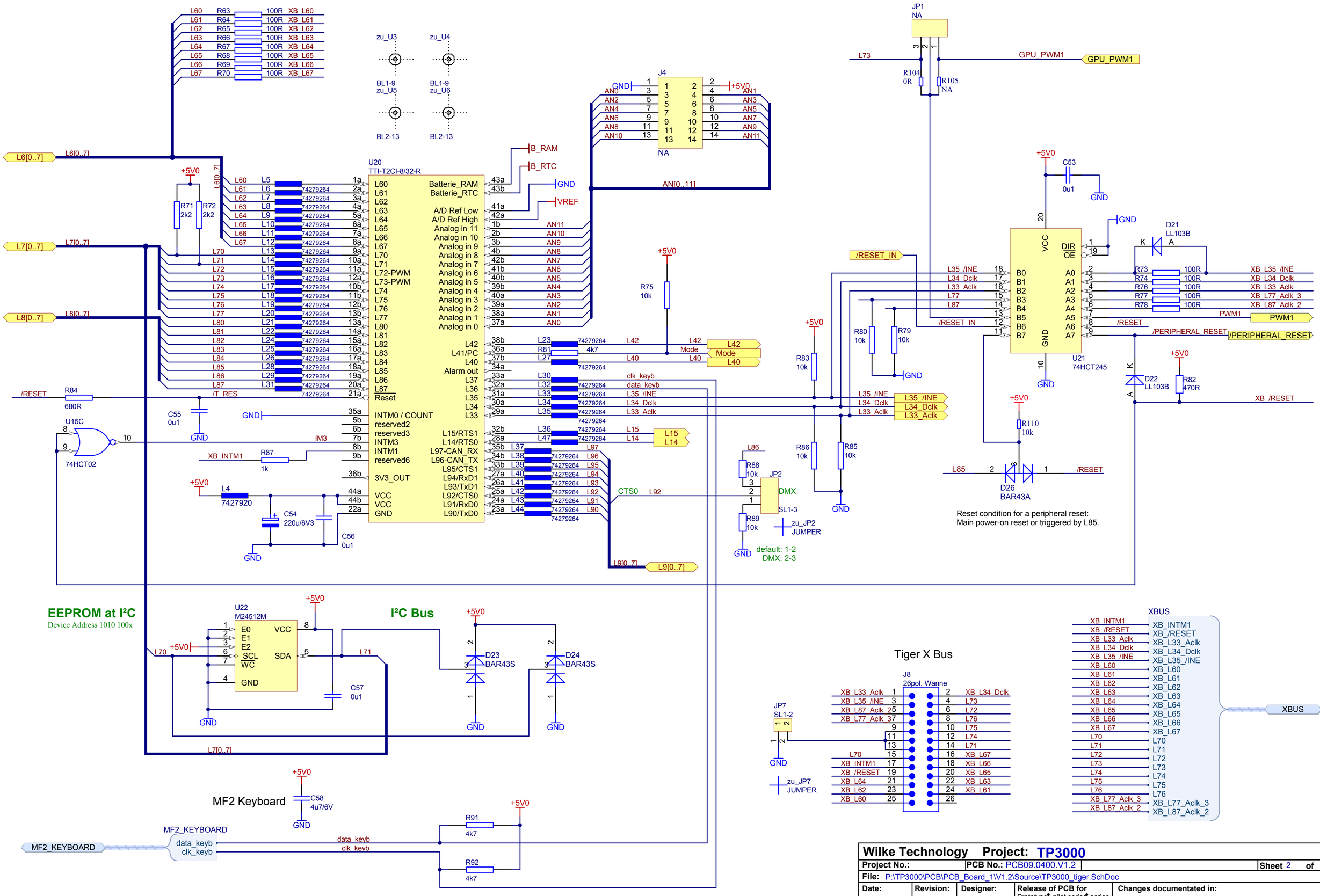

Wilke Technology	Project: TP3000			
Project No.:	PCB No.: PCB09.0400.V1.2			Sheet 2 of 11
File: P:\TP3000\PCB\PCB_Board_1\V1.2\Source\TP3000_tiger.SchDoc				
Date:	Revision:	Designer:	Release of PCB for Prototype • pilot series • series	Changes documented in:
27. Juli 2009	V1.0	P. Grusdat	• •	P:\TP3000\PCB\History_TP3000.doc
18. Sep 2009	V1.1	P. Grusdat	• •	P:\TP3000\PCB\History_TP3000.doc
20. Jul. 2010	V1.2	P. Grusdat	• •	P:\TP3000\PCB\History_TP3000.doc

TP3000

Graphic LC Controller

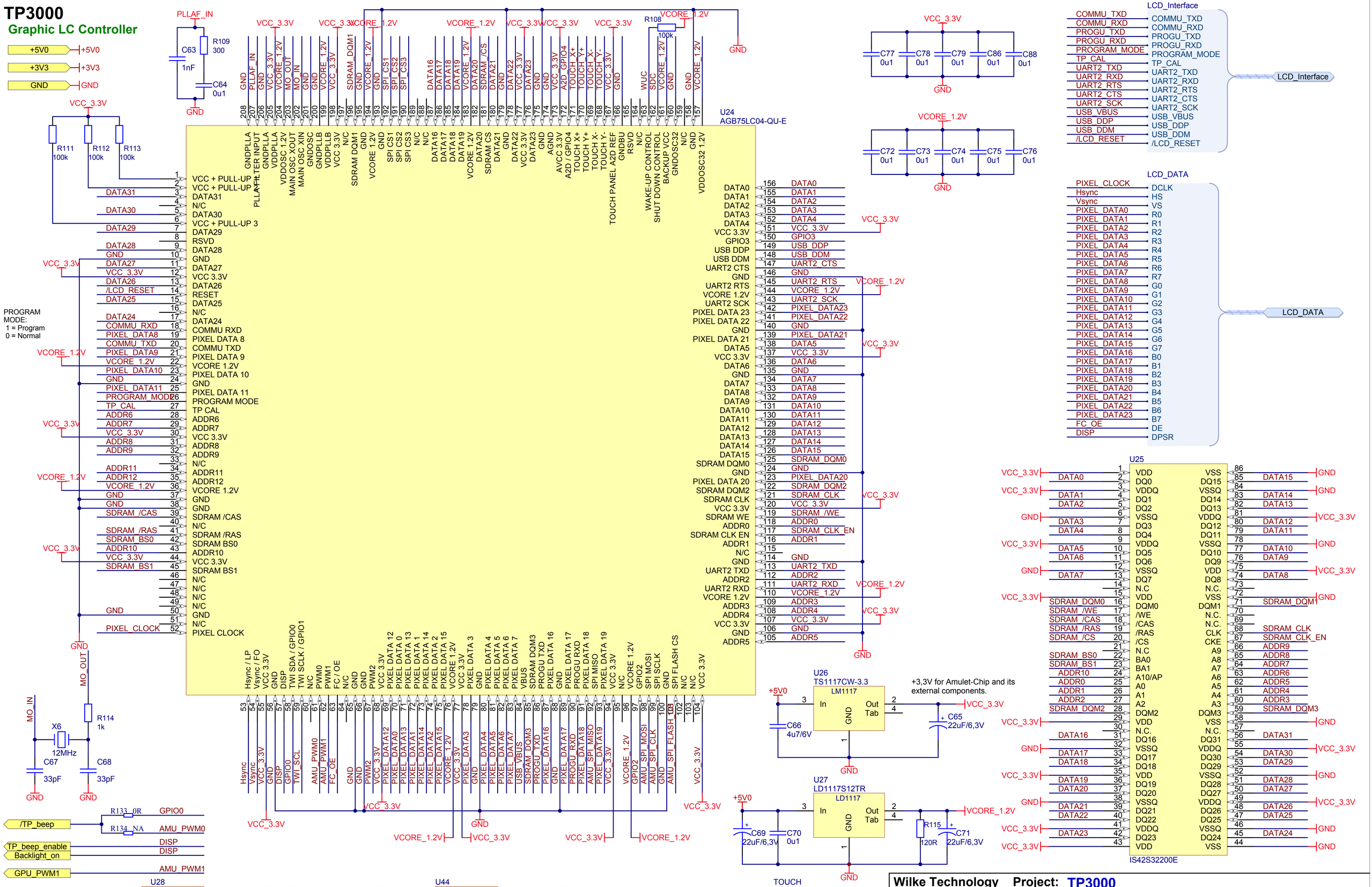

Wilke Technology	Project: TP3000			
Project No.:	PCB No.: PCB09.0400.V1.2			Sheet 3 of 11
File: P:\TP3000\PCB\PCB_Board_1\V1.2\Source\TP3000_LCC.SchDoc				
Date:	Revision:	Designer:	Release of PCB for Prototype• pilot series• series	Changes documented in:
17. Jul 2009	V1.0	P. Grusdat	• •	P:\TP3000\PCB\History_TP3000.doc
18. Sep 2009	V1.1	P. Grusdat	• •	P:\TP3000\PCB\History_TP3000.doc
20. Jul 2010	V1.2	P. Grusdat	• •	P:\TP3000\PCB\History_TP3000.doc

TP3000

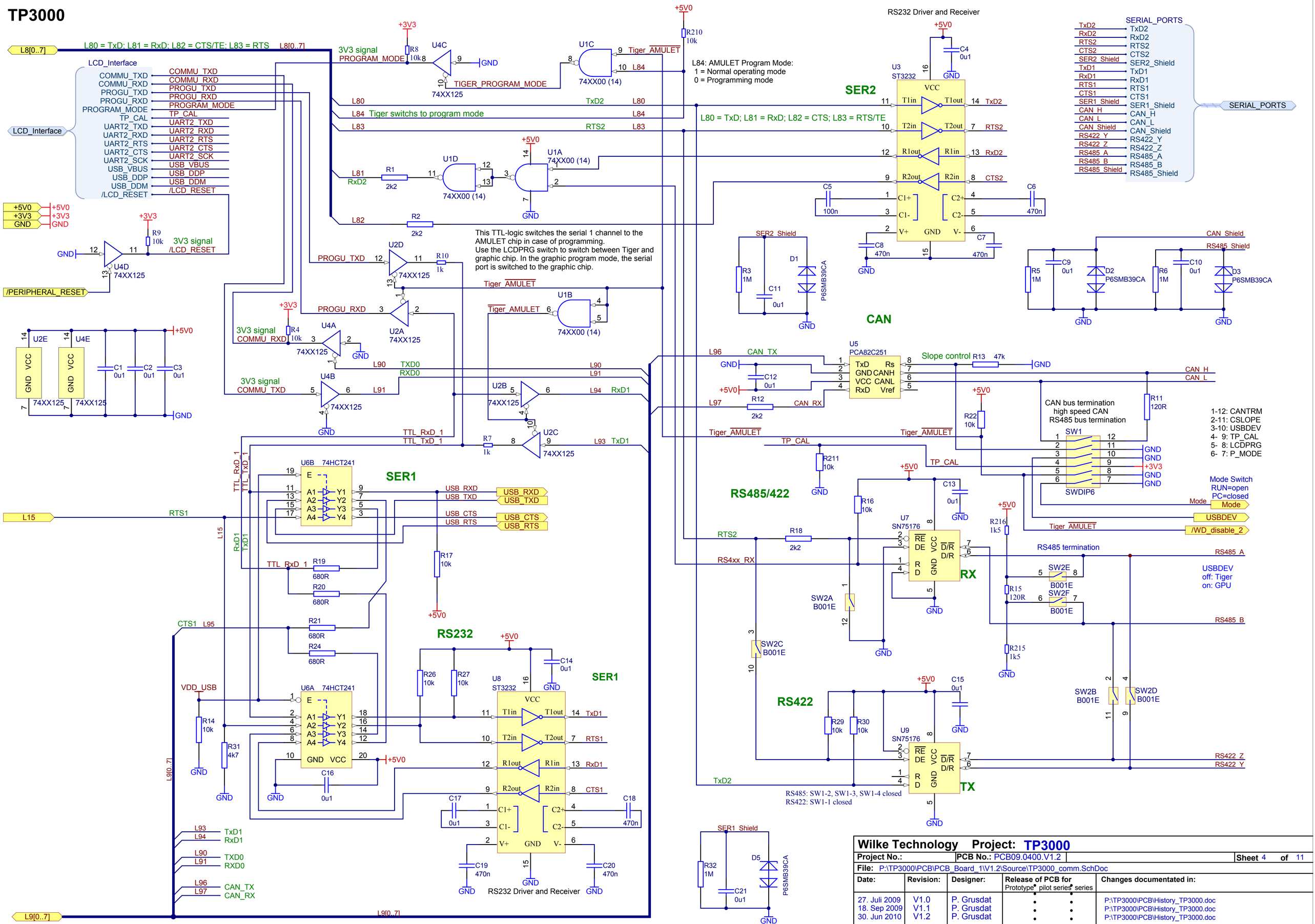
L80 = TxD; L81 = RxD; L82 = CTS/TE; L83 = RTS
L8[0..7]
LCD_Interface
COMMU_TXD
COMMU_RXD
PROGU_TXD
PROGU_RXD
PROGRAM_MODE
TP_CAL
UART2_TXD
UART2_RXD
UART2_RTS
UART2_CTS
UART2_SCK
USB_VBUS
USB_DDP
USB_DDM
/LCD_RESET
3V3 signal
PROGRAM_MODE
TIGER_PROGRAM_MODE
74XX125
74XX00 (14)
Tiger_AMULET
L84: AMULET Program Mode:
1 = Normal operating mode
0 = Programming mode
Tiger switchs to program mode
L80 = TxD; L81 = RxD; L82 = CTS; L83 = RTS/TE
This TTL-logic switches the serial 1 channel to the AMULET chip in case of programming.
Use the LCDPRG switch to switch between Tiger and graphic chip. In the graphic program mode, the serial port is switched to the graphic chip.
/LCD_RESET
/PERIPHERAL_RESET
SER2
SER1
RS232
CAN
RS485/422
RS422
RS232 Driver and Receiver
RS485 Driver and Receiver
ST3232
SN75176
PCA82C251
SERIAL_PORTS
Slope control
CAN bus termination
high speed CAN
RS485 bus termination
SWDIP6
Mode Switch
RUN=open
PC=closed
USBDEV
/WD_disable_2
RS485 termination
USBDEV
off: Tiger
on: GPU
RS485: SW1-2, SW1-3, SW1-4 closed
RS422: SW1-1 closed
1-12: CANTRM
2-11: CSLOPE
3-10: USBDEV
4- 9: TP_CAL
5- 8: LCDPRG
6- 7: P_MODE
P6SMB39CA
Wilke Technology Project: TP3000
Project No.:
PCB No.: PCB09.0400.V1.2
Sheet 4 of 11
File: P:\TP3000\PCB\PCB_Board_1\V1.2\Source\TP3000_comm.SchDoc
Date:
Revision:
Designer:
Release of PCB for
Prototype pilot series series
Changes documented in:
27. Juli 2009 V1.0 P. Grusdat P:\TP3000\PCB\History_TP3000.doc
18. Sep 2009 V1.1 P. Grusdat P:\TP3000\PCB\History_TP3000.doc
30. Jun 2010 V1.2 P. Grusdat P:\TP3000\PCB\History_TP3000.doc

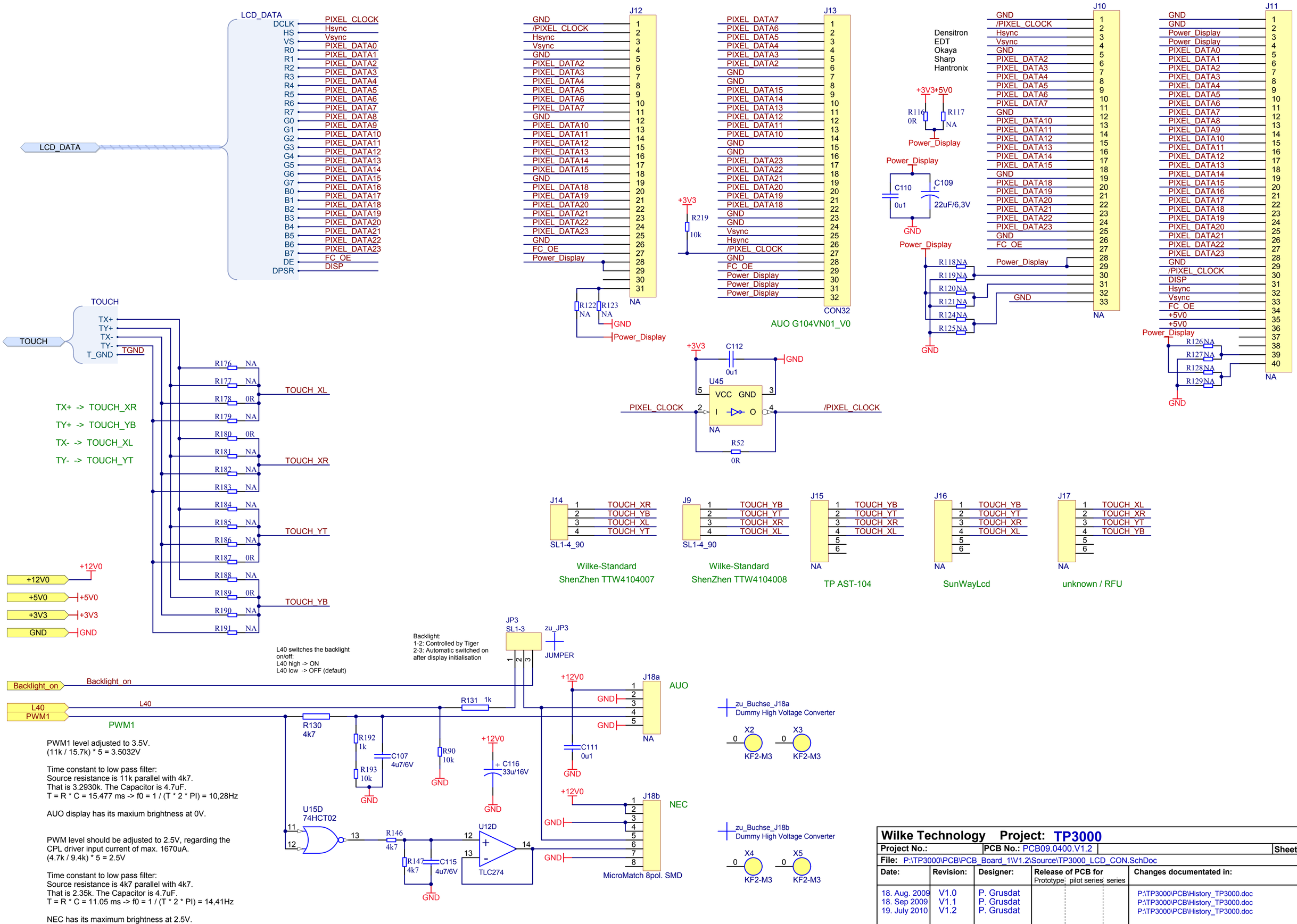

Wilke Technology	Project: TP3000			
Project No.:	PCB No.: PCB09.0400.V1.2			Sheet 5 of 11
File: P:\TP3000\PCB\PCB_Board_1\V1.2\Source\TP3000_LCD_CON.SchDoc				
Date:	Revision:	Designer:	Release of PCB for (Prototype / pilot series / series)	Changes documented in:
18. Aug. 2009	V1.0	P. Grusdat		P:\TP3000\PCB\History_TP3000.doc
18. Sep 2009	V1.1	P. Grusdat		P:\TP3000\PCB\History_TP3000.doc
19. July 2010	V1.2	P. Grusdat		P:\TP3000\PCB\History_TP3000.doc

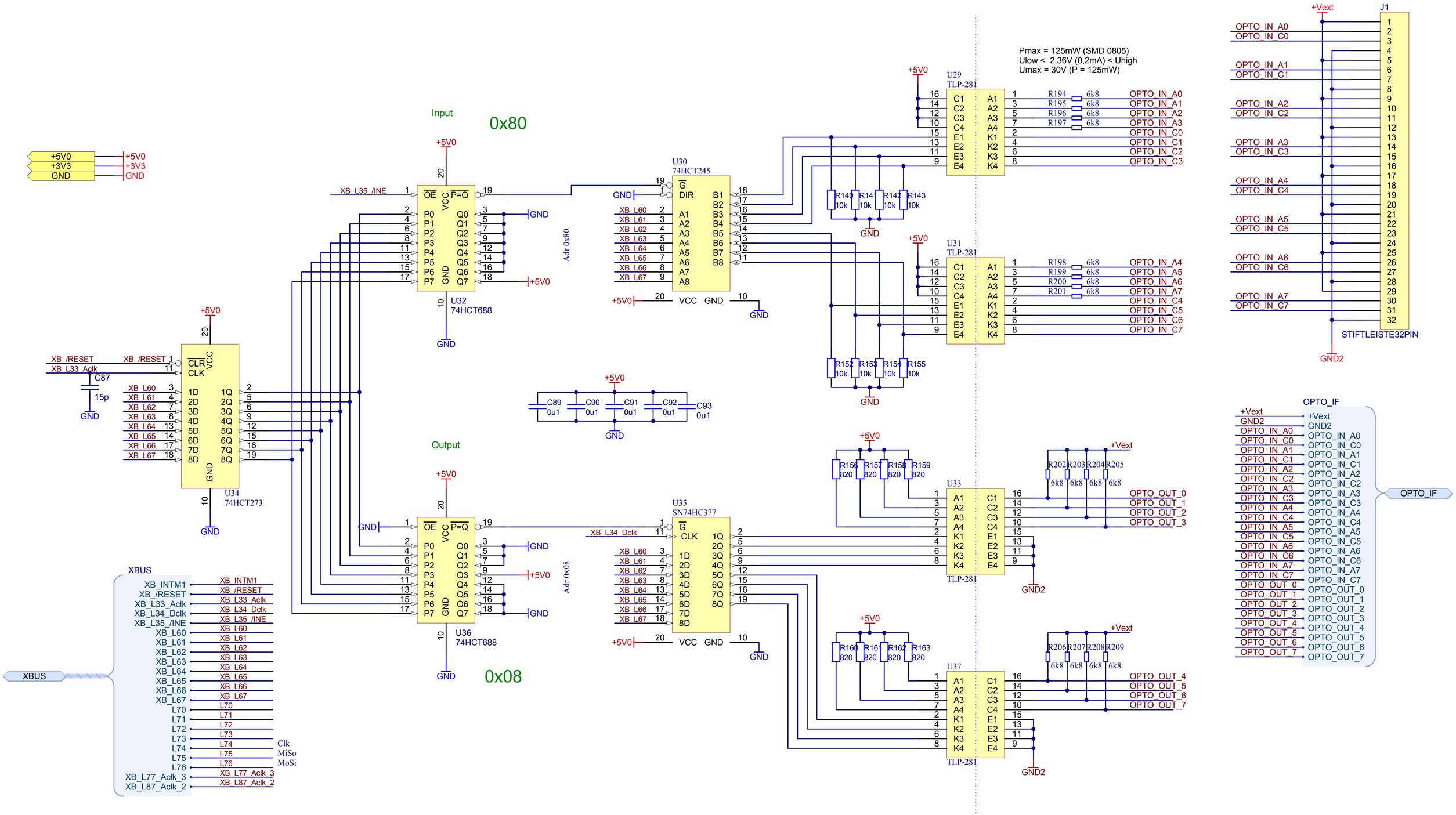

Wilke Technology	Project: TP3000		
Project No.:	PCB No.: PCB09.0400.V1.2		Sheet 6 of 11
File: P:\TP3000\PCB\PCB_Board_1\V1.2\Source\TP3000_OPTO_IOs.SchDoc			

Date:	Revision:	Designer:	Release of PCB for (Prototype / pilot series / series)	Changes documented in:
16. Jul 2009	V1.0	P.Grusdat		P:\TP3000\PCB\History_TP3000.doc
18. Sep 2009	V1.1	P. Grusdat		P:\TP3000\PCB\History_TP3000.doc
20. Jul 2010	V1.2	P. Grusdat		P:\TP3000\PCB\History_TP3000.doc

TP3000

power supply

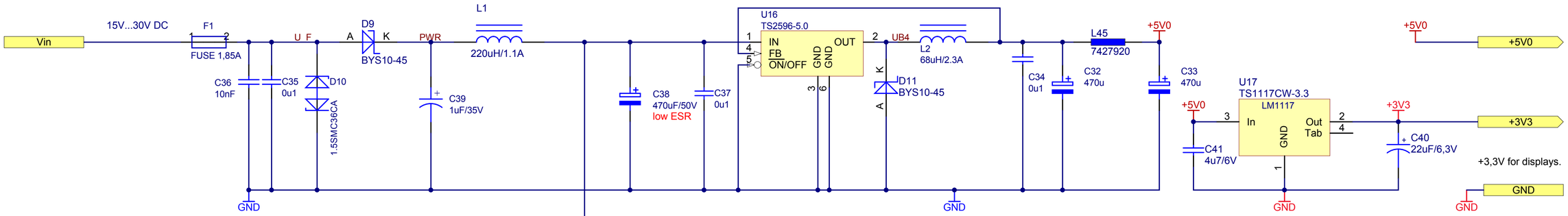

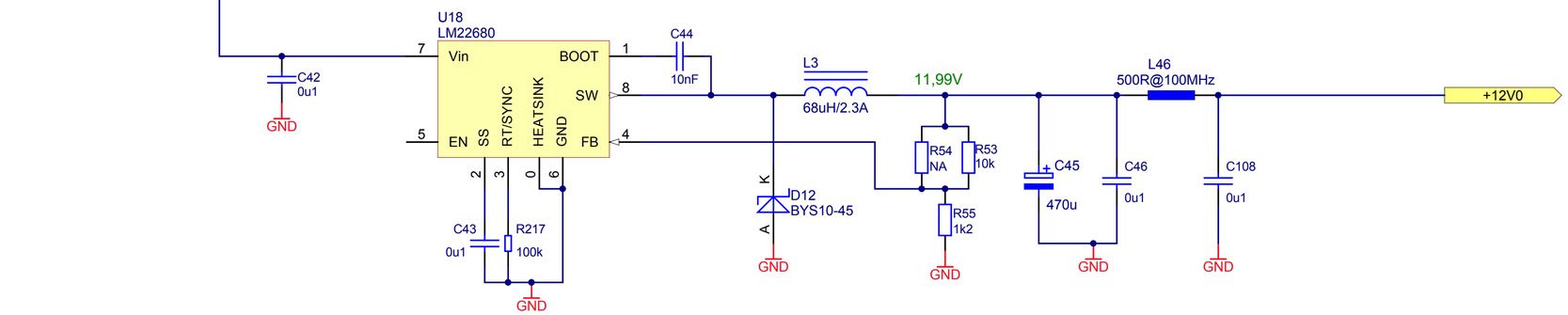

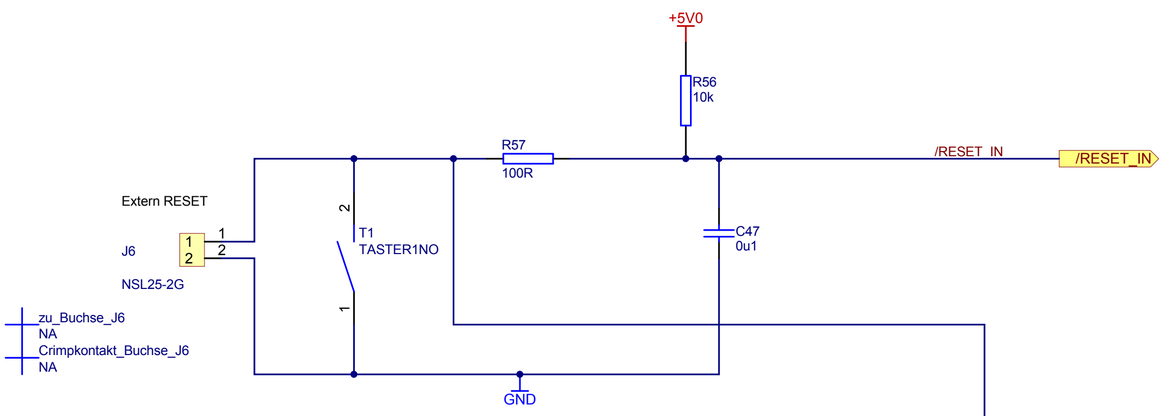

reference voltage

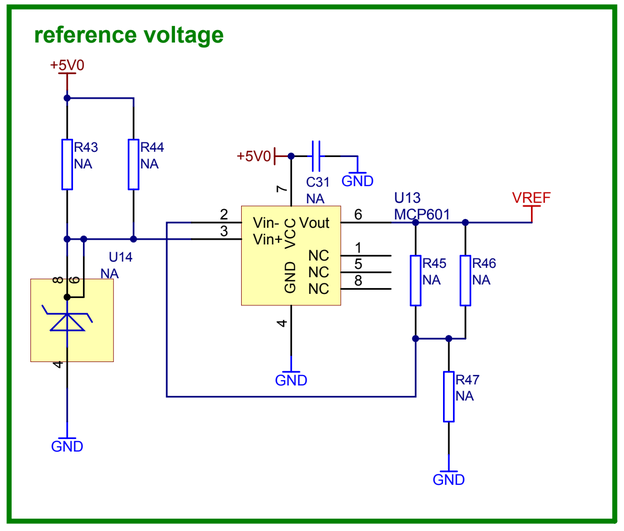

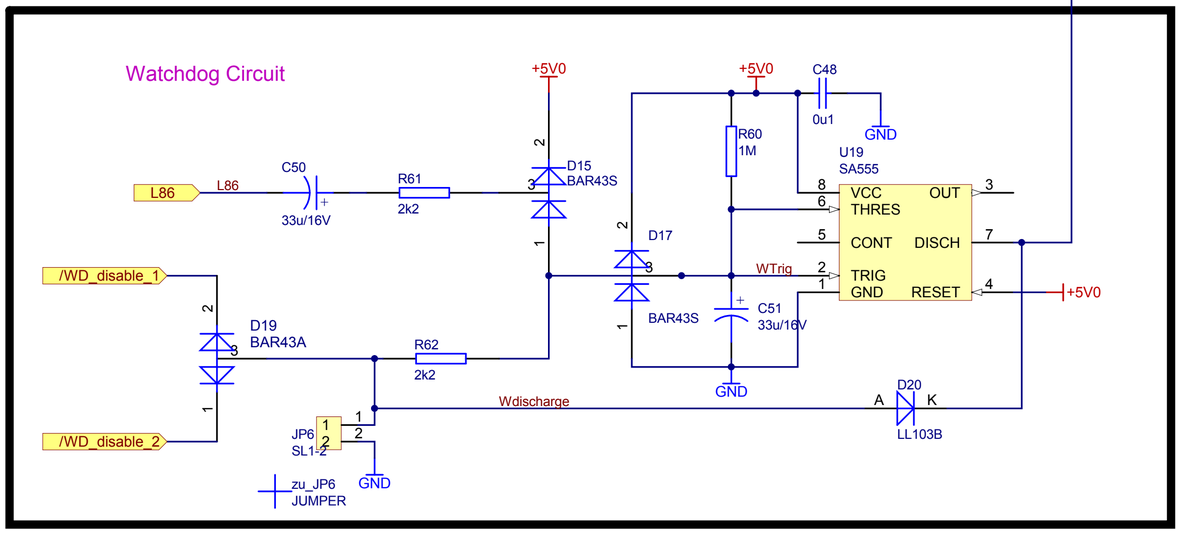

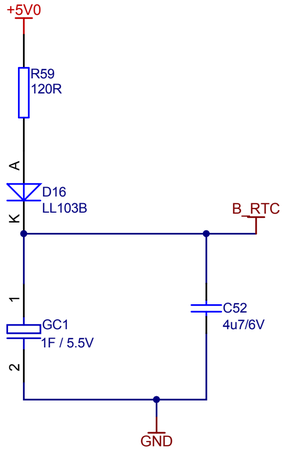

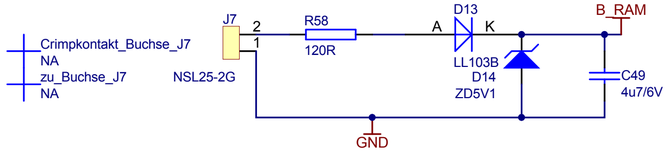

Wilke Technology	Project: TP3000			
Project No.:	PCB No.: PCB09.0400.V1.2			Sheet 7 of 11
File: P:\TP3000\PCB\PCB_Board_1\V1.2\Source\TP3000_power.SchDoc				
Date:	Revision:	Designer:	Release of PCB for Prototype• pilot series• series	Changes documented in:
03. Aug 2009	V1.0	P. Grusdat	• •	P:\TP3000\PCB\History_TP3000.doc
18. Sep 2009	V1.1	P. Grusdat	• •	P:\TP3000\PCB\History_TP3000.doc
19. Jul 2010	V1.2	P. Grusdat	• •	P:\TP3000\PCB\History_TP3000.doc

Umschaltung auf USB-Mode mit Switch/Jumper!

By alternative soldering you can attach the usb port of the amulet chip instead of the tiny tiger.

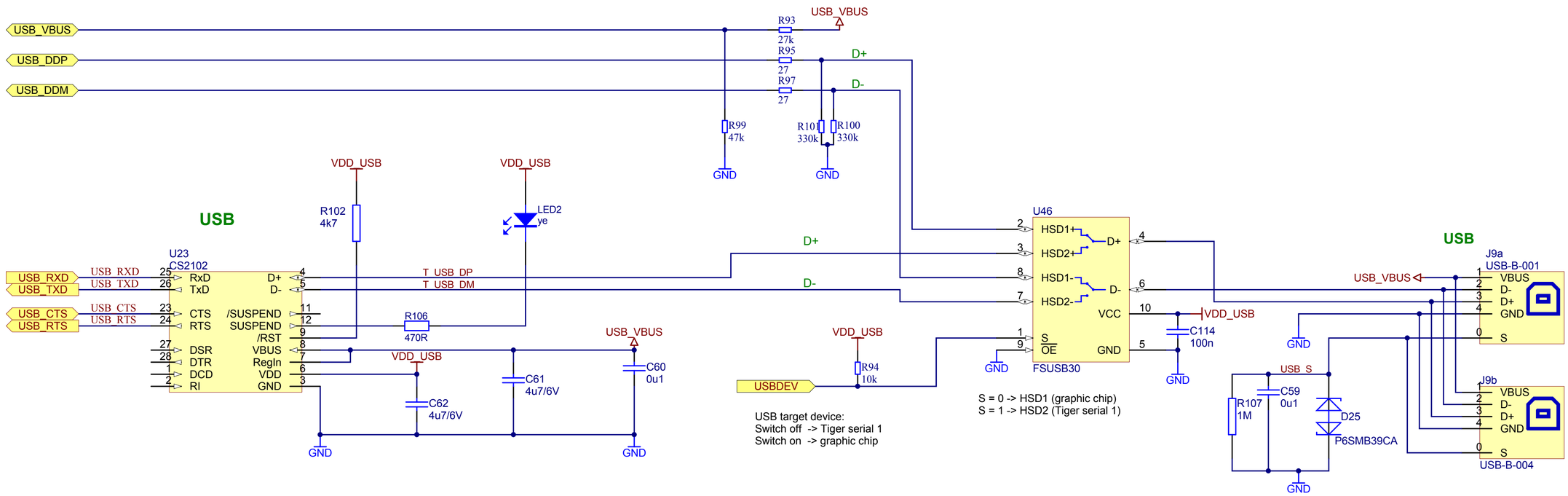

Wilke Technology Project: TP3000				
Project No.:	PCB No.: PCB09.0400.V1.2			Sheet 8 of 11
File: P:\TP3000\PCB\PCB_Board_1\V1.2\Source\TP3000_usb.SchDoc				
Date:	Revision:	Designer:	Release of PCB for Prototype pilot series series	Changes documented in:
27. Juli 2009	V1.0	P.Grusdat		P:\TP3000\PCB\History_TP3000.doc
24. Juni 2010	V1.2	P.Grusdat		P:\TP3000\PCB\History_TP3000.doc

logic

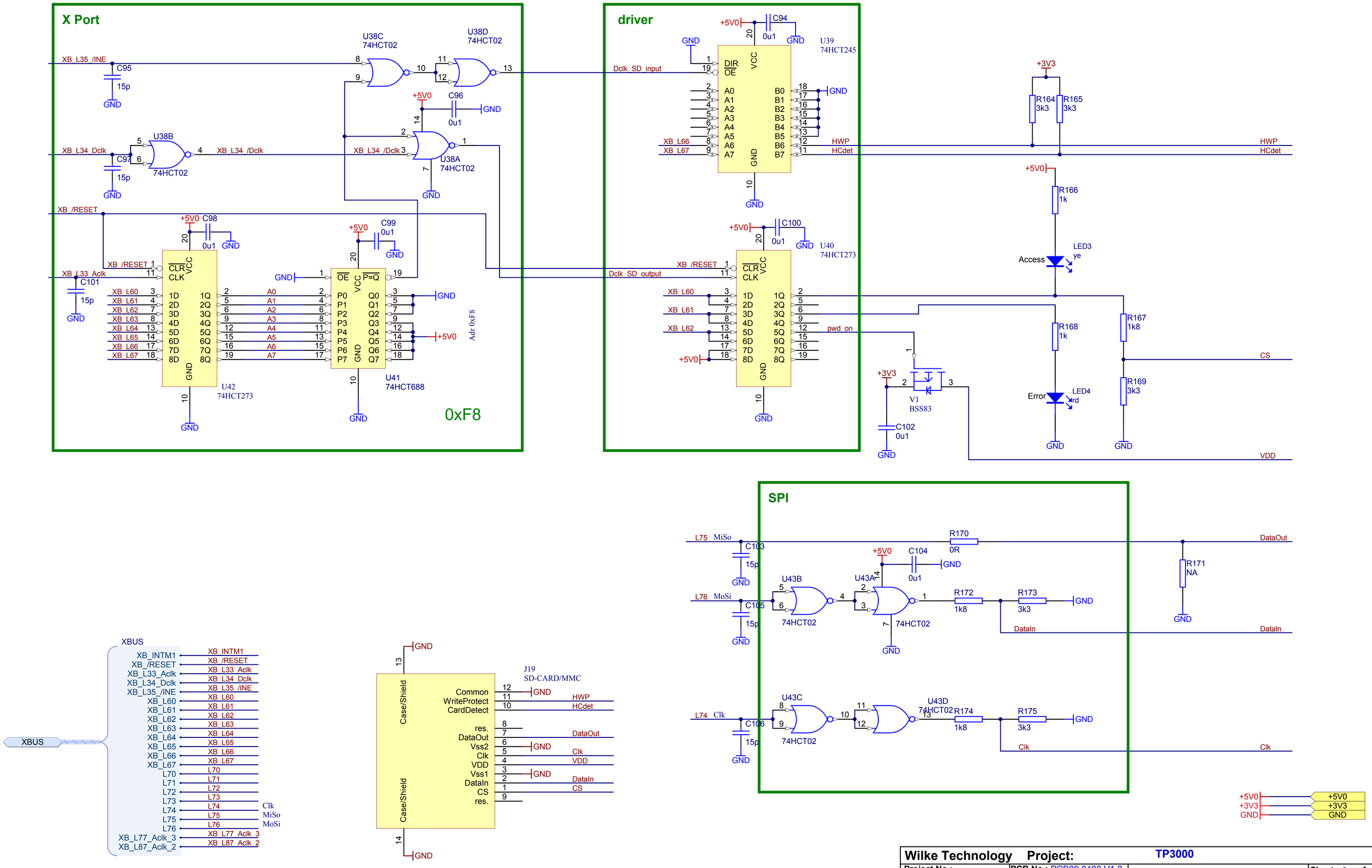

Wilke Technology	Project:	TP3000	
Project No.:	PCB No.: PCB09.0400.V1.2		Sheet 9 of 11
File: P:\TP3000\PCB\PCB_Board_1\V1.2\Source\TP3000_SD-Card.SchDoc			

Date:	Revision:	Designer:	Release of PCB for Prototype: pilot series series	Changes documentated in:
28.07.2009	V1.0	P. Grusdat		P:\TP3000\PCB\History_TP3000.doc
18. Sep 2009	V1.1	P. Grusdat		P:\TP3000\PCB\History_TP3000.doc

TP3000 Ethernet

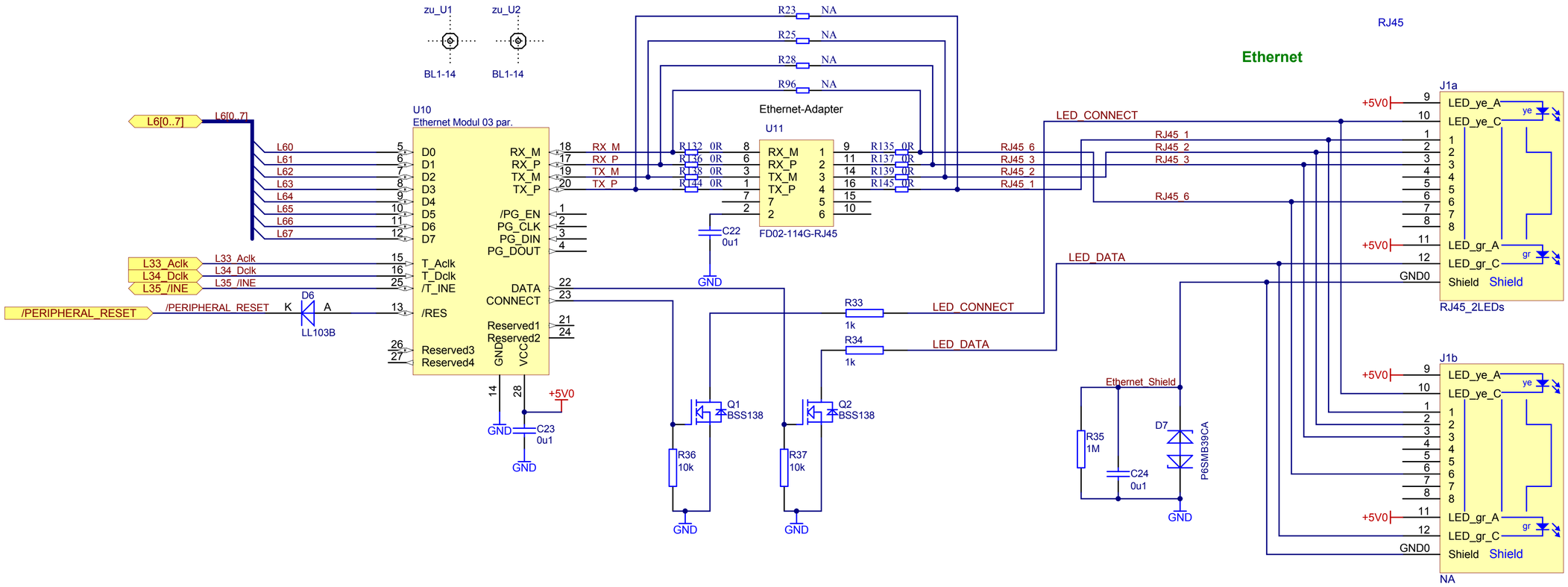

Wilke Technology Project: TP3000				
Project No.:	PCB No.: PCB09.0400.V1.2			Sheet 10 of 11
File: P:\TP3000\PCB\PCB_Board_1\V1.2\Source\TP3000_ethernet.SchDoc				
Date:	Revision:	Designer:	Release of PCB for Prototype pilot series series	Changes documentated in:
17. Jul 2009	V1.0	P. Grusdat		P:\TP3000\PCB\History_TP3000.doc
20. Jul 2010	V1.2	P. Grusdat		P:\TP3000\PCB\History_TP3000.doc

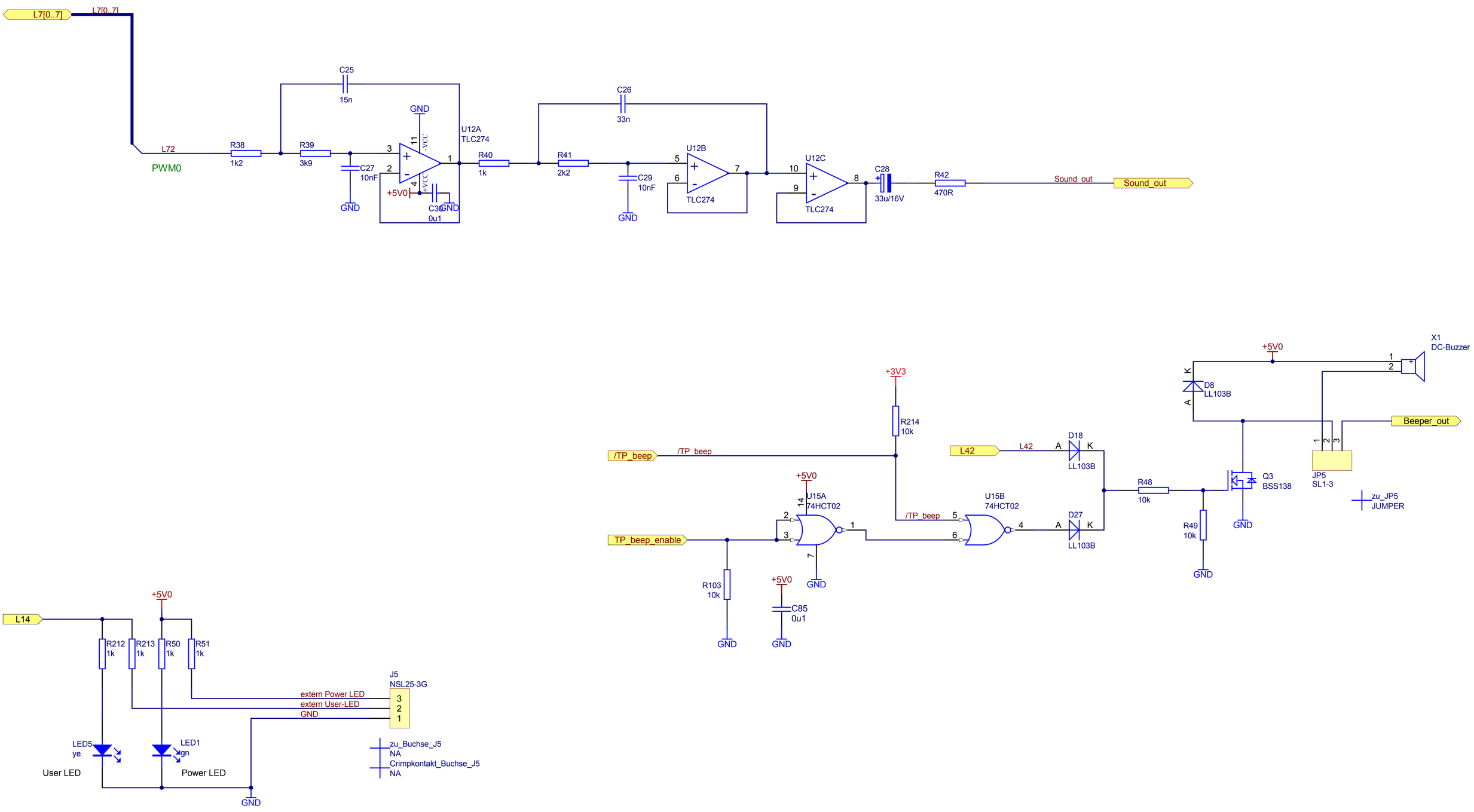

Wilke Technology Project: TP3000

Project No.:	**PCB No.:** PCB09.0400.V1.2		**Sheet** 11 **of** 11
File: P:\TP3000\PCB\PCB_Board_1\V1.2\Source\TP3000_mech.SchDoc			

Date:	Revision:	Designer:	Release of PCB for Prototype• pilot series• series	Changes documentated in:
18. Aug 2009	V1.0	P. Grusdat	• •	P:\TP3000\PCB\History_TP3000.doc
18. Sep 2009	V1.1	P. Grusdat	• •	P:\TP3000\PCB\History_TP3000.doc
08. Jul 2010	V1.2	P. Grusdat	• •	P:\TP3000\PCB\History_TP3000.doc