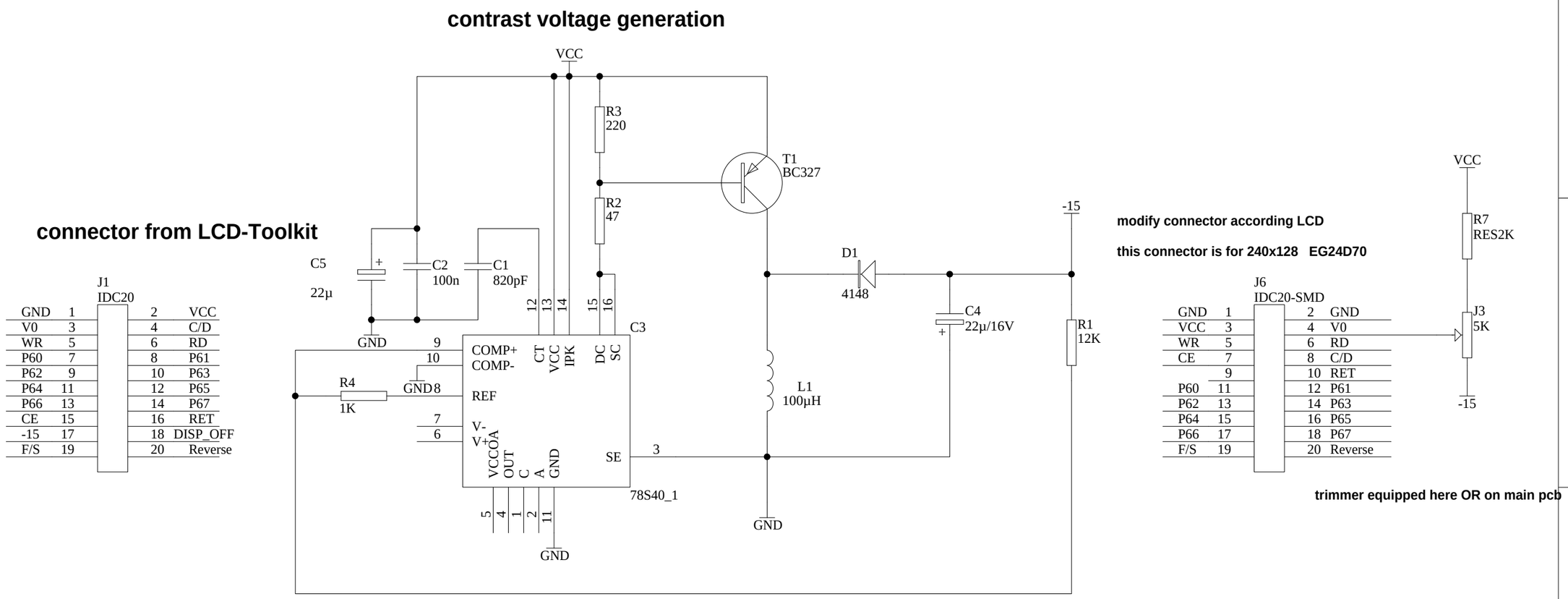
contrast voltage generation
connector from LCD-Toolkit
J1
IDC20
GND 1 2 VCC
V0 3 4 C/D
WR 5 6 RD
P60 7 8 P61
P62 9 10 P63
P64 11 12 P65
P66 13 14 P67
CE 15 16 RET
-15 17 18 DISP_OFF
F/S 19 20 Reverse
VCC
R3
220
R2
47
T1
BC327
C5
22µ
C2
100n
C1
820pF
GND
R4
1K
COMP+
COMP-
REF
V-
V+
CT
VCC
IPK
DC
SC
VCC
OUT
C
A
GND
SE
C3
78S40_1
L1
100µH
D1
4148
C4
22µ/16V
-15
R1
12K
GND
modify connector according LCD
this connector is for 240x128 EG24D70
J6
IDC20-SMD
GND 1 2 GND
VCC 3 4 V0
WR 5 6 RD
CE 7 8 C/D
9 10 RET
P60 11 12 P61
P62 13 14 P63
P64 15 16 P65
P66 17 18 P67
F/S 19 20 Reverse
VCC
R7
RES2K
J3
5K
-15
trimmer equipped here OR on main pcb
backlight switch
VCC
R9
820
R6
220
T3
BD140
R5
4K7
DISP_OFF
T2
BC817
LCD+
J2
CON2
C6
47u/6V
J4
PS-E1715
VCC HV
GND HV
J5
SIP5
GND
Title
Size
A4
Number
Revision
Date: 6-Oct-2004
Sheet of
File: P:\LCD_U-Converter\PCB\Platine_1\ProtelDesignerBy:cd_uco1.DDB